Page 1
Changed chart(s) since Disc 09-2011
ADD = Added chart, REV = Revised chart, DEL = Deleted chart.

ACT	PROCEDURE IDENT	INDEX	REV DATE	EFF DATE

No revision activity since Disc 09-2011

TERMINAL CHART NOTAMs

No Chart NOTAMs for Airport USMU

General Info

Novy Urengoy, RUS
N 66° 04.2' E 76° 31.2' Mag Var: 20.9°E
Elevation: 211'

Public, IFR, Control Tower, No Customs

Time Zone Info: GMT+5:00 uses DST

Runway Info

Runway 09-27 8366' x 151' concrete

Runway 09 (88.0°M) TDZE 211'
Lights: Edge, ALS
Runway 27 (268.0°M) TDZE 201'
Lights: Edge, ALS

Communications Info

Dragun Tower **121.9** Non-English
Dragun Krug/Start Radar **118.3** Non-English
Dragun Transit Operations **131.9** Non-English

Notebook Info

Licensed to AlexAir. Printed on 27 May 2011.
Notice: After 3 Jun 2011 0901Z, this chart may no longer be valid. Disc 10-2011

USMU/NUX

Apt Elev **211′**
N66 04.2 E076 31.2

JEPPESEN 26 NOV 10 (10-9)

NOVY URENGOY, RUSSIA

NOVY URENGOY

*DRAGUN Start	*Tower
118.3 Russian only	121.9 Russian only

FOR RUSSIAN USERS ONLY

Acft with low engines shall taxi from parking stands to rwy or vice versa via Twy 2.
Taxiing via Twy 3 at minimums speed and strictly along twy centerline, exercise caution.
Twy 4 available for helicopter.

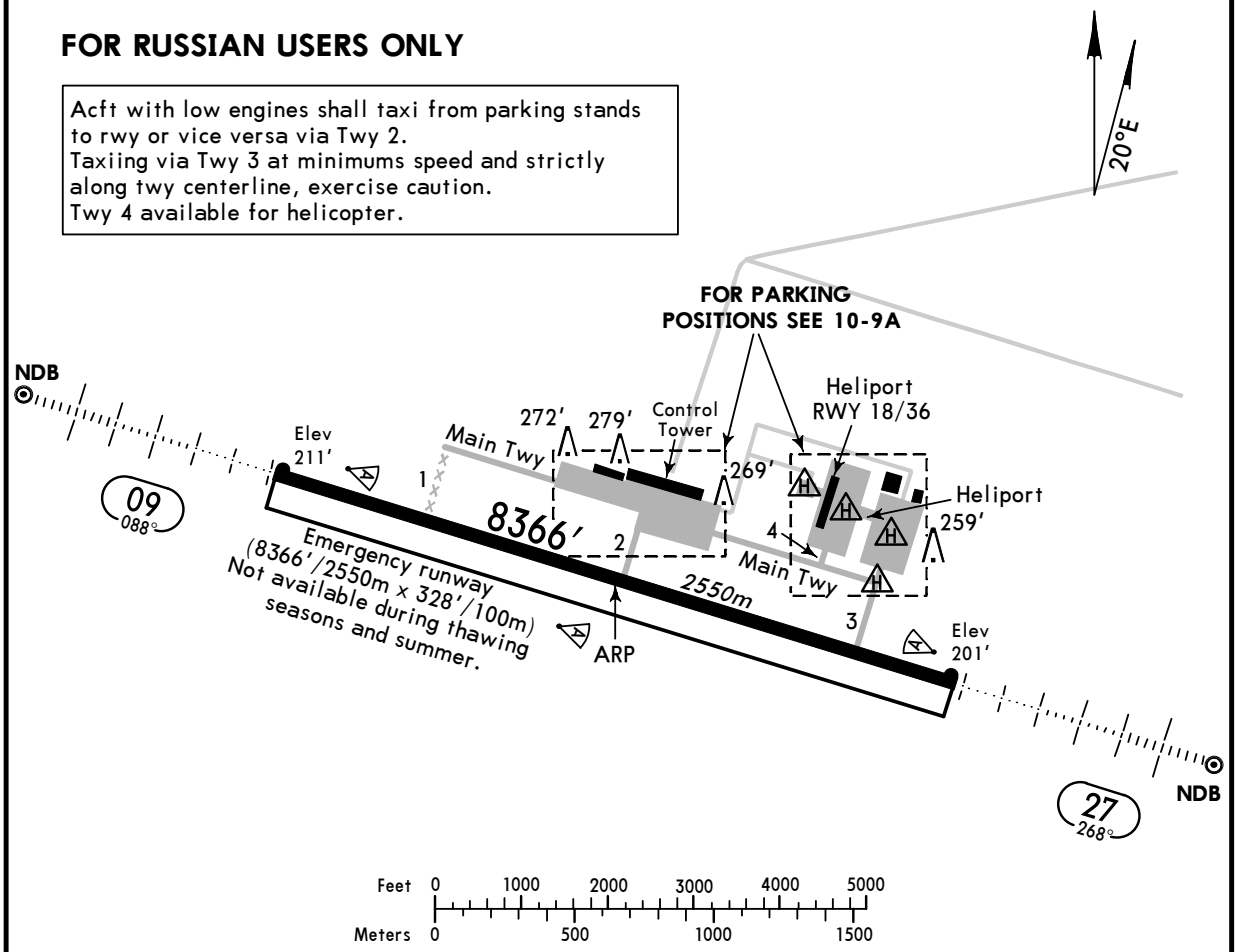

ADDITIONAL RUNWAY INFORMATION

RWY		USABLE LENGTHS LANDING BEYOND Threshold	Glide Slope	TAKE-OFF	WIDTH
09 27	HIRL❶ HIALS RVR	8300′ *2530m*❷		7972′ *2430m*❸	151′ *46m*

❶ Elevated runway lights 2′/0.5m AGL to 3′/0.8m AGL at a distance of 10′/3.0m from runway edges.
❷ First 66′/20m unusable for landing.
❸ First 394′/120m unusable for take-off.

TAKE-OFF

AIR CARRIER (JAA)
All Rwys

	LVP must be in force RCLM (DAY only) or RL	RCLM (DAY only) or RL
A	*250m*	*400m*
B		
C		
D	*300m*	

CHANGES: New airport.

© JEPPESEN, 2010. ALL RIGHTS RESERVED.

Licensed to AlexAir. Printed on 27 May 2011.
Notice: After 3 Jun 2011 0901Z, this chart may no longer be valid. Disc 10-2011

FOR RUSSIAN USERS ONLY

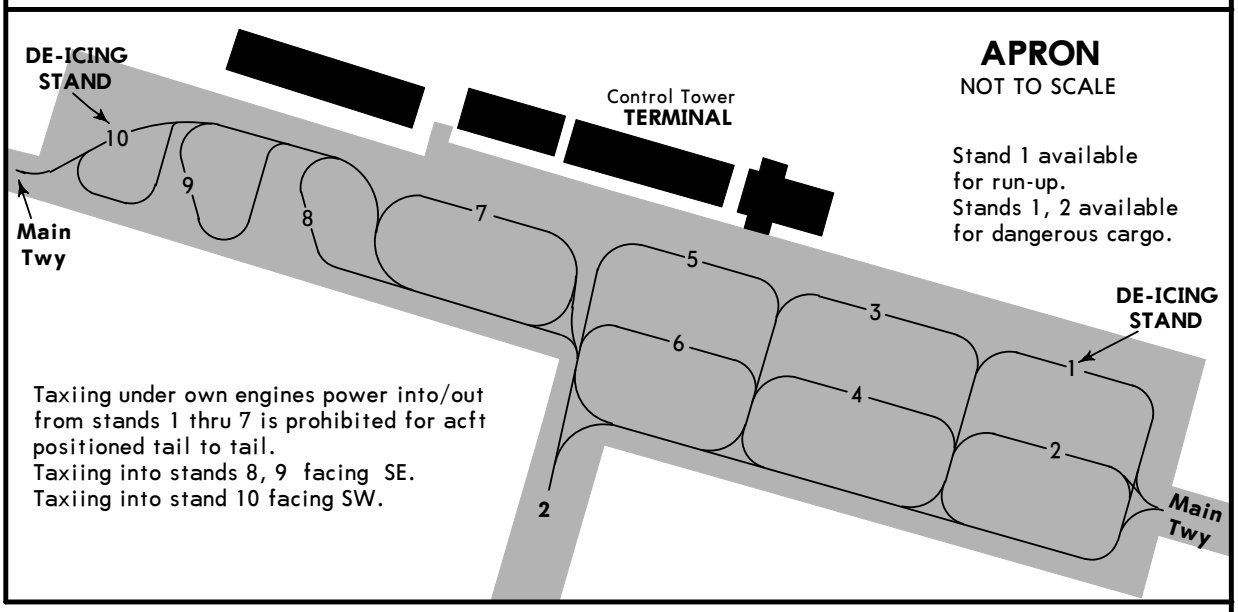

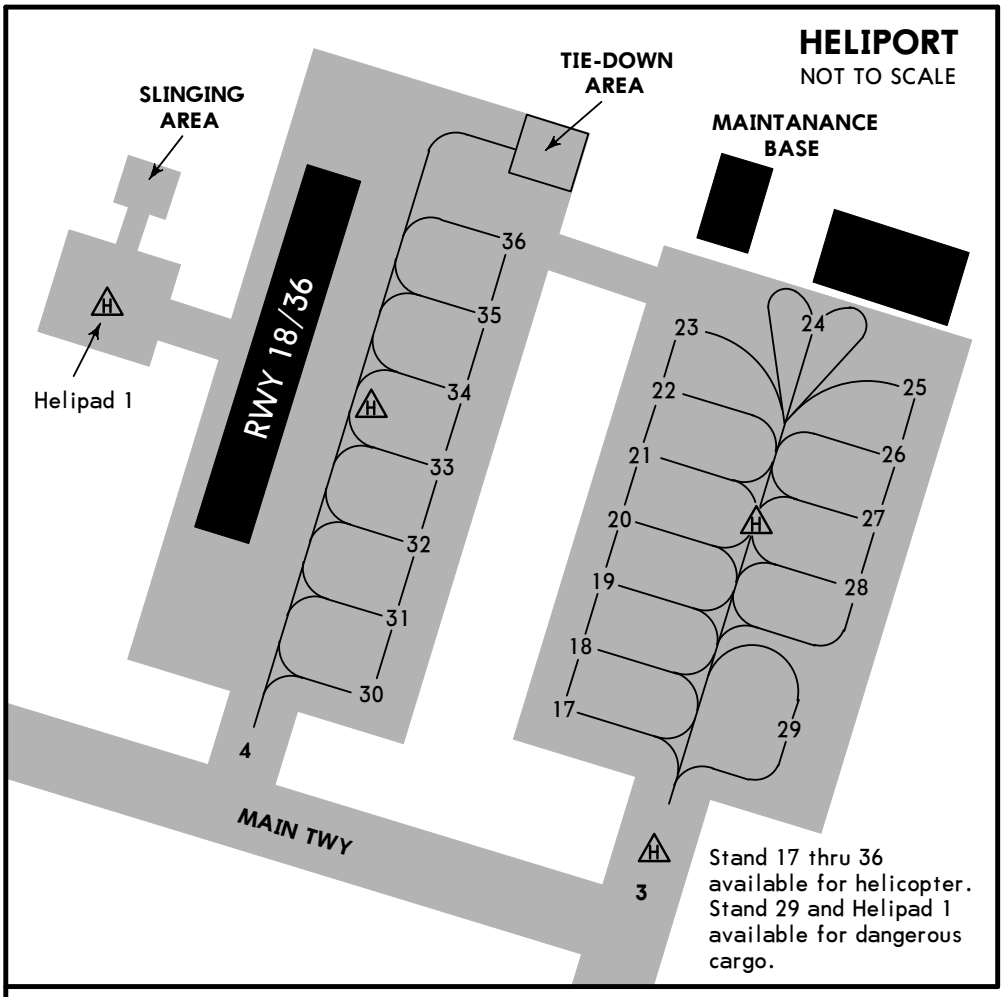

CHANGES: New chart.

© JEPPESEN, 2010. ALL RIGHTS RESERVED.

Licensed to AlexAir. Printed on 27 May 2011.
Notice: After 3 Jun 2011 0901Z, this chart may no longer be valid. Disc 10-2011

JEPPESEN
JeppView 3.7.4.0

USMU/NUX
NOVY URENGOY

JEPPESEN
26 NOV 10 (11-1)

NOVY URENGOY, RUSSIA
ILS Rwy 09

BRIEFING STRIP ™

*DRAGUN Krug/Start (RDR)	*DRAGUN Tower
118.3 Russian only	121.9 Russian only

LOC IND	Final Apch Crs	GS LOM	ILS DA(H)	Apt Elev / RWY
*110.5	088°	901′(690′)	Refer to Minimums	211′ / 211′

MISSED APCH: Climb to 870′(659′), then turn RIGHT onto 268° climbing to 1860′(1649′), then according to chart.

2100′
MSA N NDB

Alt Set: MM (hPa on req) QNH on req (QFE) Trans level: By ATC Trans alt: 2840′(2629′)

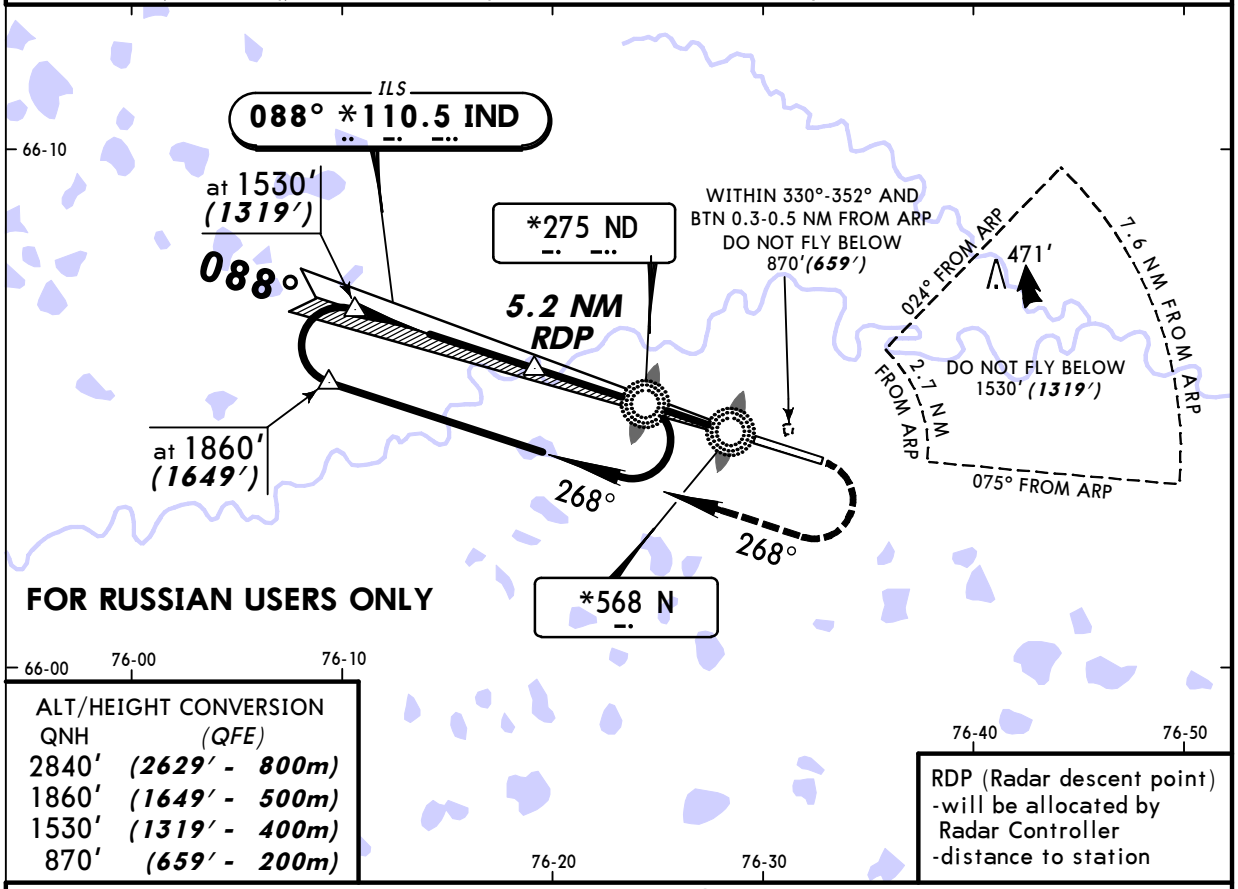

ALT/HEIGHT CONVERSION

QNH	(QFE)
2840′	(2629′ - 800m)
1860′	(1649′ - 500m)
1530′	(1319′ - 400m)
870′	(659′ - 200m)

RDP (Radar descent point)
-will be allocated by Radar Controller
-distance to station

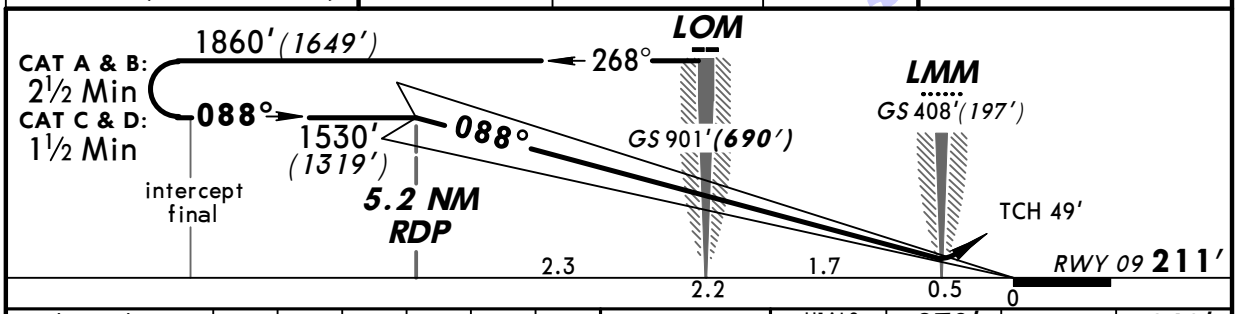

Gnd speed-Kts	70	90	100	120	140	160
GS 2.67°	336	432	480	576	671	767

HIALS | 870′(659′) | 268° RT | 1860′(1649′)

STRAIGHT-IN LANDING RWY 09

	ILS FULL	ILS ALS out	LOC (GS out)
DA(H) AB:	411′(200′)		
DA(H) CD:	441′(230′) [1]		
A	RVR 720m	1200m	NOT AUTHORIZED
B			
C	VIS 800m		
D			

PANS OPS

[1] For IL-86 acft: DA(H) 506′(295′), FULL 900m, ALS out RVR 1500m VIS 1600m.

CHANGES: New procedure.

© JEPPESEN, 2010. ALL RIGHTS RESERVED.

Licensed to AlexAir. Printed on 27 May 2011.
Notice: After 3 Jun 2011 0901Z, this chart may no longer be valid. Disc 10-2011

JEPPESEN
JeppView 3.7.4.0

USMU/NUX
NOVY URENGOY

JEPPESEN
26 NOV 10 (11-2)

NOVY URENGOY, RUSSIA
ILS Rwy 27

BRIEFING STRIP ™

*DRAGUN Krug/Start (RDR)	*DRAGUN Tower
118.3 Russian only	121.9 Russian only

LOC	Final	GS	ILS	
IYC	Apch Crs	LOM	DA(H)	Apt Elev 211′
*109.5	268°	922′(721′)	Refer to Minimums	RWY 201′

MISSED APCH: Climb to 860′(659′), then turn LEFT onto 088° climbing to 1850′ (1649′), then according to chart.

2100′
MSA Y NDB

Alt Set: MM (hPa on req) QNH on req (QFE) Trans level: By ATC Trans alt: 2840′(2639′)

FOR RUSSIAN USERS ONLY

ALT/HEIGHT CONVERSION

QNH	(QFE)
2840′	(2639′ - 800m)
1850′	(1649′ - 500m)
1520′	(1319′ - 400m)
860′	(659′ - 200m)

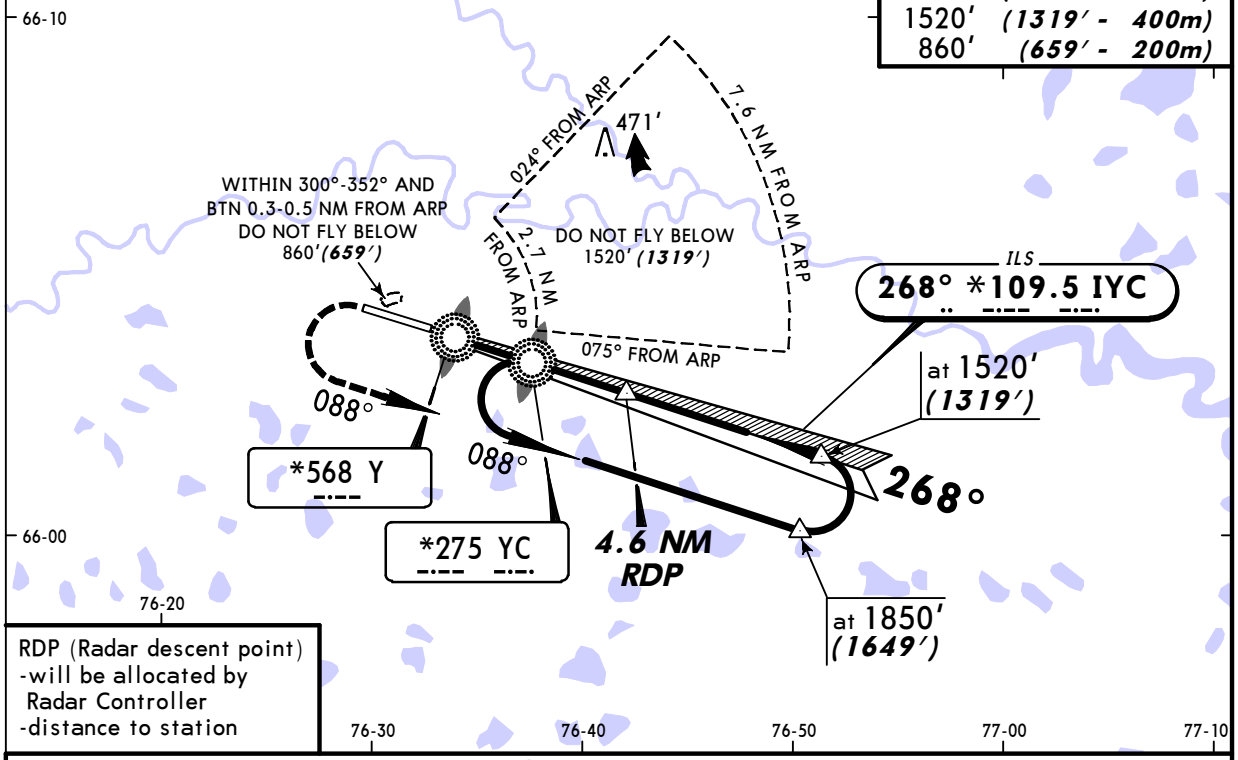

RDP (Radar descent point)
-will be allocated by Radar Controller
-distance to station

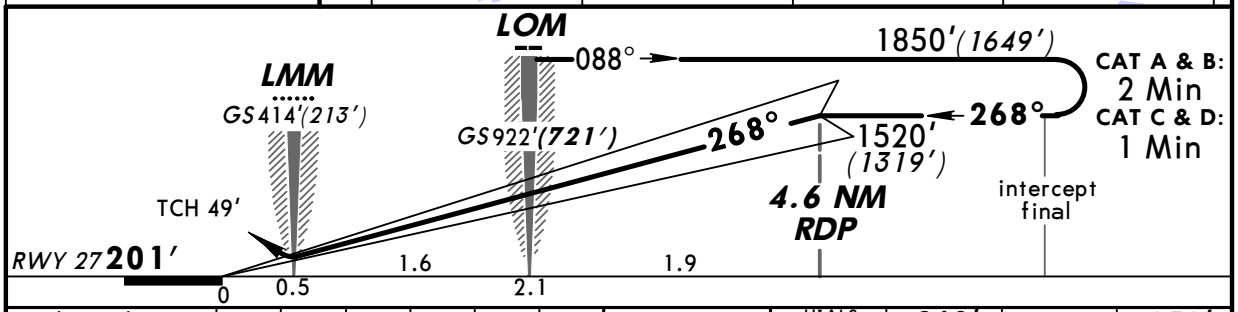

Gnd speed-Kts		70	90	100	120	140	160
GS	3.00°	377	484	538	646	753	861

HIALS | 860′ (659′) | 088° LT | 1850′ (1649′)

STRAIGHT-IN LANDING RWY 27

ILS	LOC (GS out)
AB: 401′(200′)	
DA(H) CD: 431′(230′) [1]	
FULL / ALS out	

PANS OPS

	FULL	ALS out	LOC (GS out)
A	RVR 720m	1200m	NOT AUTHORIZED
B			
C	VIS 800m		
D			

[1] **For IL-86 acft:** DA(H) 496′(295′), FULL 900m, ALS out RVR 1500m VIS 1600m.

CHANGES: New procedure.

© JEPPESEN, 2010. ALL RIGHTS RESERVED.

Licensed to AlexAir. Printed on 27 May 2011.
Notice: After 3 Jun 2011 0901Z, this chart may no longer be valid. Disc 10-2011

JEPPESEN
JeppView 3.7.4.0

USMU/NUX
NOVY URENGOY

JEPPESEN
26 NOV 10 (16-1)

NOVY URENGOY, RUSSIA
2 NDB or NDB Rwy 09

BRIEFING STRIP ™

*DRAGUN Krug/Start (RDR)	*DRAGUN Tower
118.3 Russian only	121.9 Russian only

NDB	Final Apch Crs	Minimum Alt 5.2 NM RDP	MDA(H)	Apt Elev / RWY
ND *275	088°	1530′(1319′)	Refer to Minimums	Apt Elev 211′ RWY 211′

MISSED APCH: Climb to 870′(659′), then turn RIGHT onto 268° climbing to 1860′(1649′), then according to chart.

2100′ MSA N NDB

Alt Set: MM (hPa on req) QNH on req (QFE) Trans level: by ATC Trans alt: 2840′(2629′)

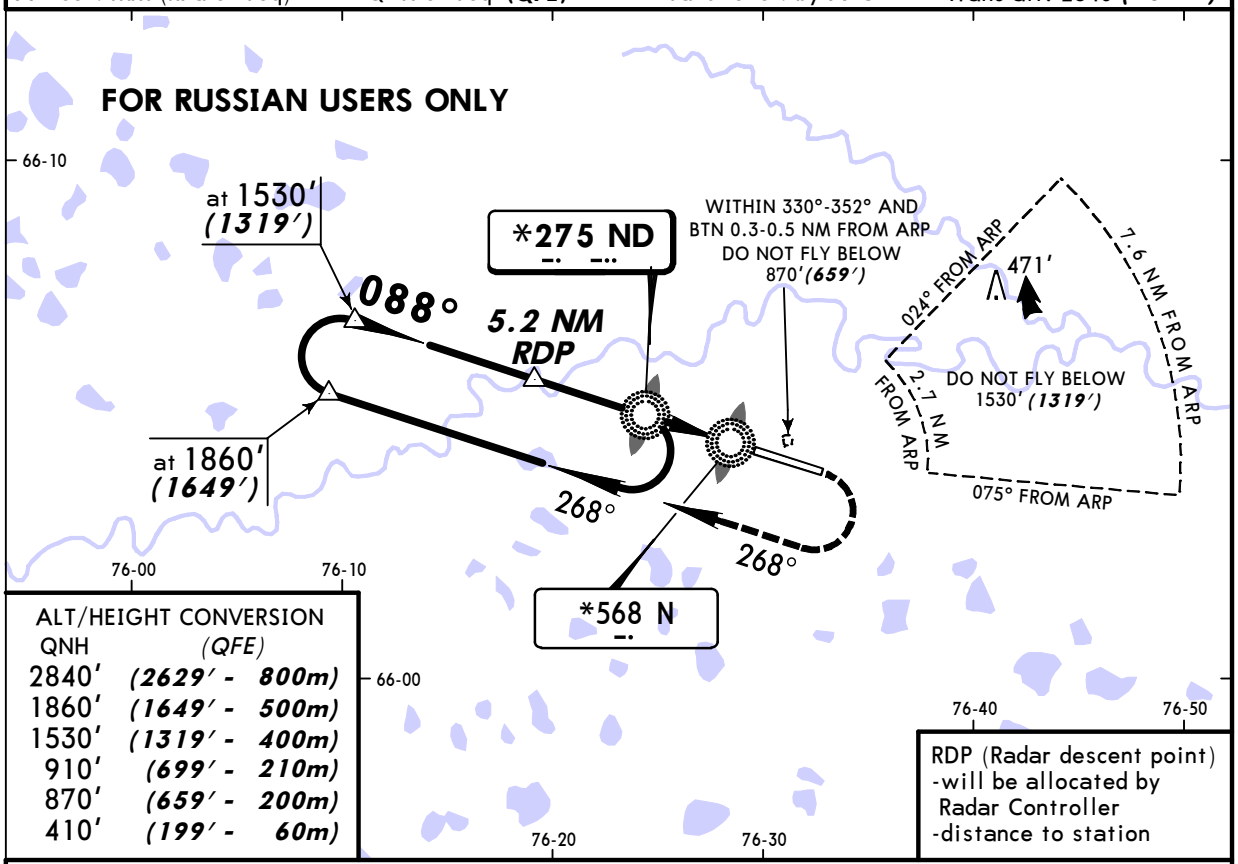

ALT/HEIGHT CONVERSION

QNH	(QFE)
2840′	(2629′ - 800m)
1860′	(1649′ - 500m)
1530′	(1319′ - 400m)
910′	(699′ - 210m)
870′	(659′ - 200m)
410′	(199′ - 60m)

RDP (Radar descent point)
-will be allocated by Radar Controller
-distance to station

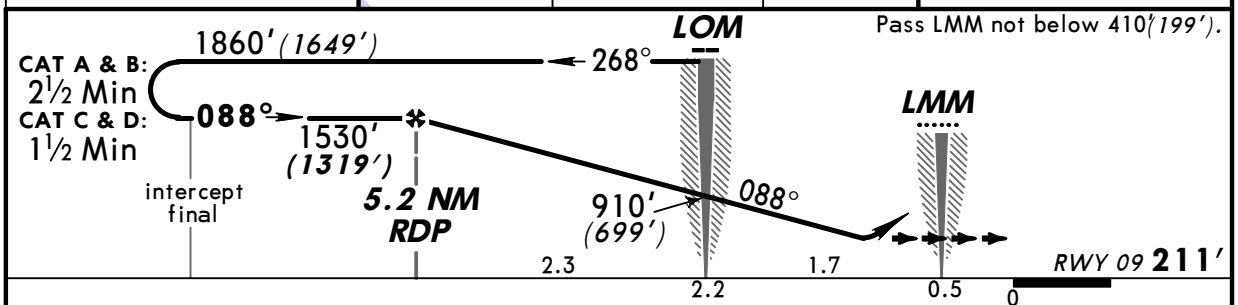

Gnd speed-Kts	70	90	100	120	140	160
Descent angle 2.69°	333	428	476	571	666	761

HIALS | 870′ (659′) | 268° RT | 1860′ (1649′)

STRAIGHT-IN LANDING RWY 09

	2 NDB		ND LOM		N LMM	
	MDA(H) 540′(329′) 1		AB: 870′(659′) MDA(H) CD: 1040′(829′) 2		AB: 870′(659′) MDA(H) CD: 1200′(989′) 3	
		ALS out		ALS out		ALS out
A	1200m	RVR 1500m VIS 1600m	3200m		3200m	
B						
C			3200m	4000m	4000m	4800m
D	RVR 1500m VIS 1600m		4000m	4400m	4400m	

PANS OPS

For IL-86 acft: 1 MDA(H) 610′(399′), 1900m, ALS out 2300m.
2 MDA(H) 1100′(889′), 4400m, ALS out 4800m. 3 MDA(H) 1270′(1059′).

CHANGES: New procedure.

© JEPPESEN, 2010. ALL RIGHTS RESERVED.

Licensed to AlexAir. Printed on 27 May 2011.
Notice: After 3 Jun 2011 0901Z, this chart may no longer be valid. Disc 10-2011

JEPPESEN
JeppView 3.7.4.0

USMU/NUX
NOVY URENGOY

JEPPESEN
26 NOV 10 (16-2)

NOVY URENGOY, RUSSIA
2 NDB or NDB Rwy 27

BRIEFING STRIP ™

*DRAGUN Krug/Start (RDR)	*DRAGUN Tower
118.3 Russian only	121.9 Russian only

NDB	Final Apch Crs	Minimum Alt 4.6 NM RDP	MDA(H)	Apt Elev 211′
YC *275	268°	1520′(1319′)	Refer to Minimums	RWY 201′

MISSED APCH: Climb to, 2 NDB: 860′(659′), NDB: 1190′(989′), then turn LEFT onto 088° climbing to 1850′ (1649′), then according to chart.

2100′
MSA Y NDB

Alt Set: MM (hPa on req) QNH on req (QFE) Trans level: by ATC Trans alt: 2840′(2639′)

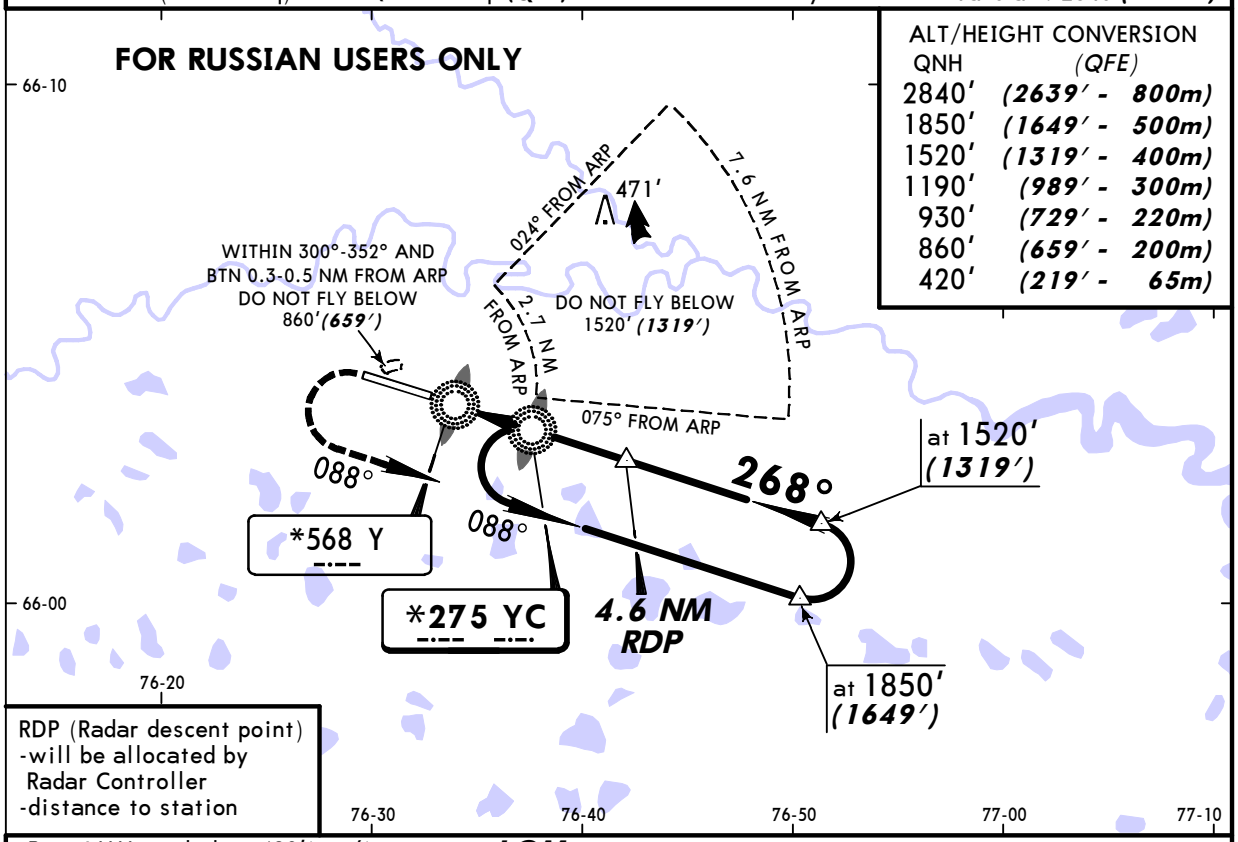

ALT/HEIGHT CONVERSION

QNH	(QFE)
2840′	(2639′ - 800m)
1850′	(1649′ - 500m)
1520′	(1319′ - 400m)
1190′	(989′ - 300m)
930′	(729′ - 220m)
860′	(659′ - 200m)
420′	(219′ - 65m)

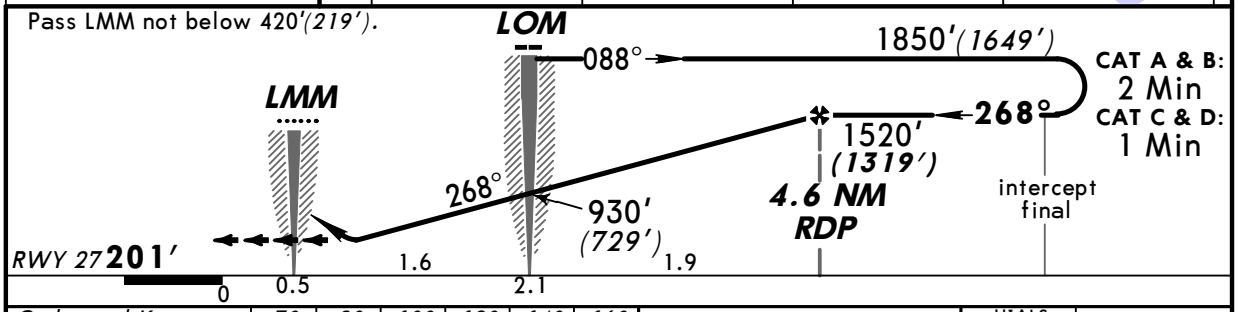

Gnd speed-Kts		70	90	100	120	140	160
Descent angle	3.00°	372	478	531	637	743	849

HIALS

Refer to Missed Apch above

STRAIGHT-IN LANDING RWY 27

	2 NDB		YC LOM with FAF	YC LOM w/o FAF	Y LMM with FAF	Y LMM w/o FAF
	MDA(H) 530′(329′) 1		MDA(H) AB: 860′(659′) CD: 1030′(829′) 2	MDA(H) 1090′(889′) 3	MDA(H) AB: 860′(659′) CD: 1190′(989′) 4	MDA(H) AB: 1090′(889′) CD: 1190′(989′) 4
		ALS out	ALS out	ALS out	ALS out	ALS out
A	1200m	RVR 1500m VIS 1600m	3200m	3200m	3200m	3200m
B						
C			3200m 4000m	3600m 4400m	4000m 4800m	4000m 4800m
D	RVR 1500m VIS 1600m		4000m 4400m	4400m 4800m	4400m 4800m	4400m 4800m

PANS OPS

For IL-86 acft: 1 MDA(H) 600′(399′), RVR 1500m VIS 1600m, ALS out RVR 1800m VIS 2000m.
2 MDA(H) 1090′(889′), 4400m, ALS out 4800m. 3 MDA(H) 1160′(959′). 4 MDA(H) 1260′(1059′).

CHANGES: New procedure.

© JEPPESEN, 2010. ALL RIGHTS RESERVED.